Button insert cutters

A251

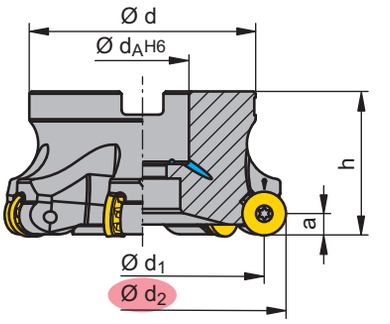

to be discontinued

d_2 [mm]	Type, description	d_1 [mm]	h [mm]	d [mm]	d_A [mm]	a [mm]	n_{max} [min^{-1}]	z	
40	A251.40.R.05-10	30	40	38	16	5	15900	5	RP.. 10T3..
42	A251.42.R.06-10	32	40	38	16		15150	6	
50	A251.50.R.06-10	40	40	43	22		12700	6	
40	A251.40.R.04-12-R	28	40	38	16	6	15900	4	RP.. 1204..
42	A251.42.R.04-12	30	40	38	16		15150	4	
63	A251.63.R.06-12	51	40	48	22		10100	6	
66	A251.66.R.06-12	54	40	48	22		9650	6	
80	A251.80.R.08-12	68	50	58	27	6	7950	8	RP.. 1204..
100	A251.100.R.06-12	88	50	78	32		6350	6	
52	A251.52.R.04-16	36	40	43	22	8	12200	4	RP.. 1605..
80	A251.80.R.06-16	64	50	58	27	8	7950	6	RP.. 1605..
100	A251.100.R.07-16	84	50	78	32		6350	7	
125	A251.125.R.08-16	109	63	88	40		5050	8	
80	A251.80.R.05-20	60	50	58	27	10	7950	5	RP.. 2006..
100	A251.100.R.06-20	80	63	78	32		6350	6	
125	A251.125.R.06-20	105	63	88	40		5050	6	

Ordering example: 1 piece A251.40.R.05-10

Supply details: cutter body and insert clamping screws

	d_2 [mm]				
RP.. 10T3..	**40 - 42**	10007085/M3,0X7,3/T10	DMSD 2,0Nm/SORT T10	7883306/TORX T10	7818267/M8,0x30,0
RP.. 10T3..	**50**	10007085/M3,0X7,3/T10	DMSD 2,0Nm/SORT T10	7883306/TORX T10	
RP.. 1204..	**40 - 42**	7883209/M3,5X8,6/T15	DMSD 3,2Nm/SORT T15	7724103/TORX T15	7818267/M8,0x30,0
RP.. 1204..	**63 - 100**	7883209/M3,5X8,6/T15	DMSD 3,2Nm/SORT T15	7724103/TORX T15	
RP.. 1605..	**52**	7822114/M4,5X10,5/T20	DMSD 5,0Nm/SORT T20	7724104/TORX T20	7818268/M10,0X31,0
RP.. 1605..	**80 - 125**	7822114/M4,5X10,5/T20	DMSD 5,0Nm/SORT T20	7724104/TORX T20	

E23-E29
E40-E52
E67
E74-E78
E80-E85
C17-C18

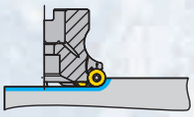

Button insert cutters

A251-RS

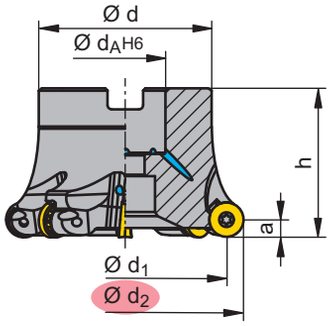

d_2 [mm]	Type, description	d_1 [mm]	h [mm]	d [mm]	d_A [mm]	a [mm]	n_{max} [min^{-1}]	z	
40	A251.40.R.05-10-RS	30	40	38	16	5	15900	5	RP.. 10T3..
	A251.40.R.03-10-RS	30	40	38	16		15900	3	
42	A251.42.R.06-10-RS	32	40	38	16		15150	6	
50	A251.50.R.04-10-RS	40	40	43	22		12700	4	
	A251.50.R.06-10-RS	40	40	43	22		12700	6	
52	A251.52.R.06-10-RS	42	40	43	22		12200	6	
40	A251.40.R.04-12-RSP	28	40	38	16	6	15900	4	RP.. 1204..
	A251.40.R.04-12-RS	28	40	38	16		15900	4	
50	A251.50.R.04-12-RS	38	40	43	22		12700	4	
	A251.50.R.05-12-RS	38	40	43	22		12700	5	
52	A251.52.R.05-12-RS	40	40	43	22		12200	5	
63	A251.63.R.06-12-RS	51	40	48	22		10100	6	
66	A251.66.R.07-12-RS	54	40	48	22		9650	7	
80	A251.80.R.05-12-RS	68	50	58	27		7950	5	
	A251.80.R.07-12-RS	68	50	58	27		7950	7	
100	A251.100.R.06-12-RS	88	50	78	32		6350	6	
	A251.100.R.10-12-RS	88	50	78	32		6350	10	
50	A251.50.R.04-16-RS	34	40	48	22	8	12700	4	RP.. 1605..
63	A251.63.R.05-16-RS	47	40	48	22		10100	5	
80	A251.80.R.06-16-RS	64	50	58	27		7950	6	
100	A251.100.R.07-16-RS	84	50	78	32		6350	7	
80	A251.80.R.05-20-RS	60	50	58	27	10	7950	5	RP.. 2006..
100	A251.100.R.06-20-RS	80	50	78	32		6350	6	
125	A251.125.R.06-20-RS	105	63	88	40		5050	6	

Ordering example: 1 piece A251.40.R.05-10-RS

Supply details: cutter body and insert clamping screws

-R = version for turbine blade machining

	d_2 [mm]				
RP.. 10T3..	**40**	10007085/M3,0X7,3/T10	DMSD 2,0Nm/SORT T10	7883306/TORX T10	7818267/M8,0x30,0
RP.. 10T3..	**40 - 52**	10007085/M3,0X7,3/T10	DMSD 2,0Nm/SORT T10	7883306/TORX T10	
RP.. 1204..	**40**	7883209/M3,5X8,6/T15	DMSD 3,2Nm/SORT T15	7724103/TORX T15	7818267/M8,0x30,0
RP.. 1204..	**50 - 100**	7883209/M3,5X8,6/T15	DMSD 3,2Nm/SORT T15	7724103/TORX T15	
RP.. 1605..	**50**	7822114/M4,5X10,5/T20	DMSD 5,0Nm/SORT T20	7724104/TORX T20	7818268/M10,0X31,0
RP.. 1605..	**63 - 100**	7822114/M4,5X10,5/T20	DMSD 5,0Nm/SORT T20	7724104/TORX T20	
RP.. 2006..	**80 - 125**	10000155/M5,0X14/T20	DMSD 5,0Nm/SORT T20	7724104/TORX T20	

E23-E29

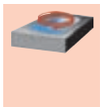
E40-E52

E67

E74-E78

E80-E85

C17-C18

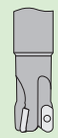
D4-D32

D33-D39

D41-D48

D49-D52

D53-D82

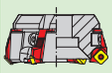

D84-D95

Inserts

Systems 251-05, -08, -10

-27P

-33

RDHX -M31

RDHX -M50

RPHX

-29

RDHX -33

-M31

RDHX

d [mm]	Type, description	H216T	CTC3215	SR226+	CTP1235	GM43+	CTC5235	CTC5240	CTP2235	GM246	TCM10	d_1 [mm]	s [mm]	α [°]
5.00	RDHX 0501MOFN	●										2.50	1.59	15
	RDHX 0501MOSN			●		●								
	RDHX 0501MOEN-M31						●							
8.00	RDHX 0802MOFN	●										2.80	2.38	
	RDHX 0802MOSN			●	●	●								
	RDHX 0802MOEN		●											
	RDHX 0802MOEN-33								●	●				
	RDHX 0802MOEN-M31						●	●						
	RDHX 0802M4EN-M31						●							
	RDNX 0802MOEN-M50		●											
10.00	RPHX 10T3MOSN			●	●	●					●	3.40	3.97	11
	RPHX 10T3MOEN		●											
	RPHX 10T3MOFN-27P	●												
	RPNX 10T3MOSN-29			●		●								
	RPHX 10T3MOEN-33								●	●				
	RPHX 10T3M4EN-M31						●	●						
	RPNX 10T3M4EN-M31						●							
	RPHX 10T3M8EN-M31						●	●						
	RPNX 10T3M8EN-M31						●							

	H216T	CTC3215	SR226+	CTP1235	GM43+	CTC5235	CTC5240	CTP2235	GM246	TCM10
Steel			●	●	●	○		○	○	●
Stainless			○	○	○	●		●	●	●
Cast iron	●	●	●			○				○
Non ferrous metals	●									
Heat resistant						●	●	○		
Hard materials										

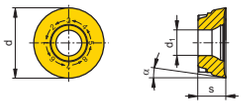

● Main application

○ Extended application

● International CERATIZIT range, for present availability see price list

Ordering example: 10 pieces RDHX 0501MOFN H216T

A20-A31

A32-A33

B2-B3

E30-E39

C251

D6-D7

G251

D41

A251

D56-D57

Inserts

Systems 251-12, -16, -20, 260/052/053

-27P -33 -33R -M32 -R60

-29 -33M -M31 -R50 RPHX

d [mm]	Type, description	H216T	CTC3215	CTP6215	SR226+	CTP1235	GM43+	CTC5235	CTC5240	CTP2235	GM246	TCM10		s [mm]	d_1 [mm]	α [°]
12.00	RPHX 1204MOSN		●		●	●	●					●		4.76	4.40	11
	RPNX 1204MOSN				●		●									
	RPHX 1204M4EN							●								
	RPHX 1204MOFN-27P	●														
	RPNX 1204MOSN-29				●		●									
	RPHX 1204MOEN-33									●	●					
	RPHX 1204M4EN-M31							●	●							
	RPNX 1204M4EN-M31							●								
	RPHX 1204M6EN-M31							●								
	RPHX 1204M8EN-M31							●	●							
	RPNX 1204M8EN-M31							●								
	RPHX 1204M4EN-M32							●								
	RPNX 1204M8EN-R60			●												
16.00	RPHX 1605MOSN		●		●	●	●							5.56	5.50	
	RPNX 1605MOSN				●											
	RPHX 1605MOFN-27P	●														
	RPNX 1605MOSN-29				●		●									
	RPHX 1605MOEN-33									●	●					
	RPHX 1605M4EN-M31							●								
	RPHX 1605M8EN-M31							●	●							
	RPNX 1605MOSN-R50		●													
20.00	RPNX 2006MOSN-33R										●			6.35	6.00	
	RPHX 2006MOSN-33M									●	●					
	RPHX 2006M4EN-M31							●								
	RPNX 2006M8EN-M31							●	●							

	H216T	CTC3215	CTP6215	SR226+	CTP1235	GM43+	CTC5235	CTC5240	CTP2235	GM246	TCM10
Steel				●	●	●	○		○	○	●
Stainless				○	○	○	●		●	●	●
Cast iron	●	●	●	●			○				○
Non ferrous metals	●										
Heat resistant							●	●	○		
Hard materials			●								

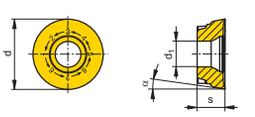

● Main application

○ Extended application

● International CERATIZIT range, for present availability see price list

Ordering example: 10 pieces RPHX 1204MOSN CTP1235

A20-A31 A32-A33 B2-B3 E30-E39 A251 D56-D57 052/053 D88

CERATIZIT hard material matters